Senther 535A-100

Embedded tri-axial IEPE accelerometer

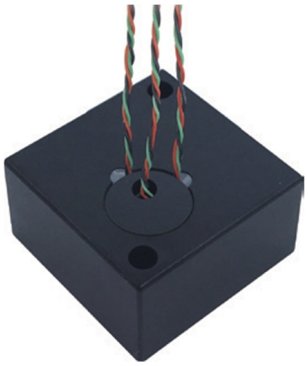

Features
- Miniature size
- Adhesive or stud mounting
- Hermetic seal
- Wide temperature range
- Wide frequency response
- Cost effective

Application
- Embedded monitoring
- Shock testing
- Modal analysis
- Machine monitoring

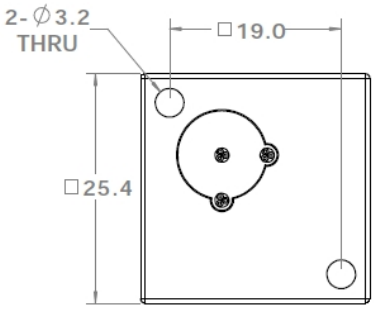

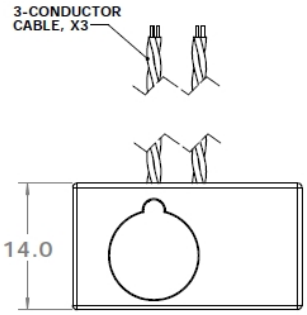

Dynamic
Sensitivity, ±10%, 25°C..... 50 mV/g
Acceleration range .....100 g peak
Amplitude nonlinearity..... 1%
Frequency response:
Z axis(±1dB).....1 - 7,000 Hz
X&Y axis(±1dB).....1 - 1,000 Hz
Resonance frequency.....38 kHz
Transverse sensitivity, max.....5% of axial
Temperature response:
–50°C.....–10%
+120°C..... +10%

Electrical
Power requirement: voltage source .....18 - 30 VDC
current regulating diode .....2 - 10 mA
Electrical noise, Broadband Spectral(g):
1 Hz to 10 kHz..... 500 µg max.
Output impedance, max..... 100 Ω
Bias output voltage..... 10 VDC
Grounding.....Case isolation

Environmental
Temperature range.....–50 to 85°C
Vibration limit..... 500 g peak
Shock limit..... 5,000 g peak
Electromagnetic sensitivity, equiv g, max ..... 70 µg/gauss
Sealing .....Hermetic
Base strain sensitivity, max.....0.0002 g/µstrain

Physical
Sensing element design..... Ceramic/MEMS
Weight..... 27 grams
Case material..... Aluminum
Output connector..... Cable

Accessories
2 X M3 mounting screws
Calibration certificate
Option: Ceramic washer
Note: Frequency response limits spectral and noise values are typical

Ordering Information
535A-100
- Range in g
- Output type
- Model