Senther 514P

Through-hole mount PE accelerometer

Features
- Miniature Size
- Adhesive or screw mounting
- Hermetic seal
- Base isolation
- Annular shear mode
- Wide temperature range
- Wide frequency response

Application
- Vibration monitoring
- Shock testing
- Road testing
- Modal analysis
- Aircraft testing

Dynamic
Sensitivity, ±10%, 25°C.....5 pC/g
Acceleration range .....2000 g peak
Amplitude nonlinearity.....1%
Frequency response:
± 5%.....1 - 7,000 Hz
±1dB.....1 - 10,000 Hz
± 3 dB.....0.5 - 15,000 Hz
Resonance frequency.....40 kHz
Transverse sensitivity, max.....5% of axial
Temperature response:
–50°C.....–10%
+200°C..... +10%

Electrical
Power requirement: voltage source .....18 - 30 VDC
current regulating diode .....2 - 10 mA
Electrical noise, Broadband Spectral(g):
1 Hz to 10 kHz..... 1 mg
Output impedance, max..... 100 Ω
Bias output voltage..... 10 VDC
Grounding..... Base isolation

Environmental
Temperature range.....–50 to 200°C
Vibration limit..... 2000 g peak
Shock limit..... 5,000 g peak
Electromagnetic sensitivity, equiv g, max ..... 70 µg/gauss
Sealing ..... Hermetic
Base strain sensitivity, max..... 0.0002 g/µstrain

Physical
Sensing element design..... PZT ceramic/shear
Weight..... 7 grams
Case material..... Stainless Steel
Output connector..... 10-32

Accessories
Mounting screw: M2, or custom(-C)
Option mating cable with BNC output: 11P-L
Calibration certificate
Note: Frequency response limits spectral and noise values are typical

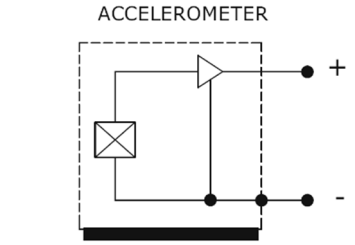

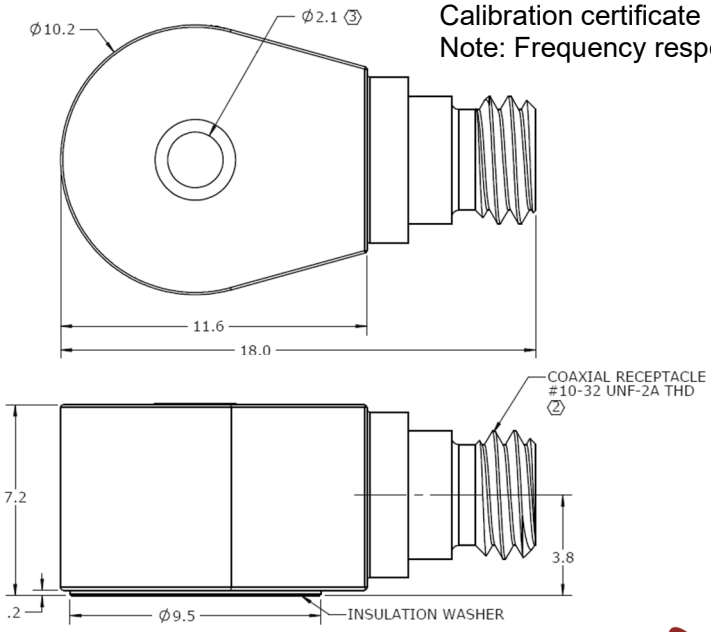

Ordering Information
514P
- Output type
- Model